Device For On–Board Rail Vehicle Switching

Passive track infrastructure with self-steering wheelbase guided by interlocked movable steering arms

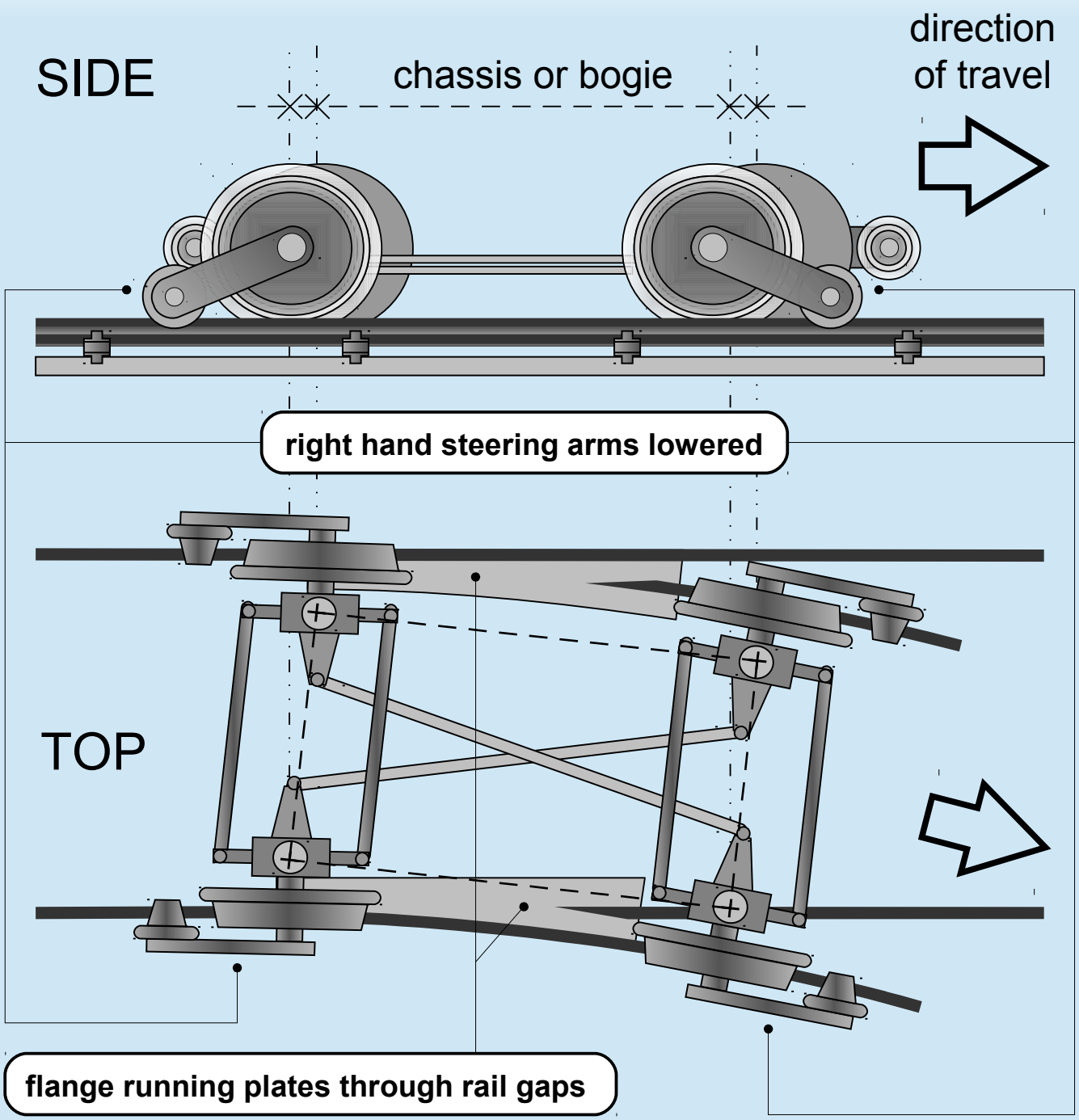

mark@townend.me